Int. J. Solids Structures Vol. 19, No. 12, pp. 1065–1088, 1983
Printed in Great Britain.

0020-7683/83 $3.00 + .00
© 1983 Pergamon Press Ltd.

THE ELASTIC THEORY OF THIN-WALLED OPEN CROSS SECTIONS WITH LOCAL DEFORMATIONS

HIDEO TAKABATAKE
Kanazawa Institute of Technology, Ogigaoka, Nonoichicho, Ishikawa, Japan 921

and

OSAMU MATSUOKA
Nagoya University, Furocho, Chikusaku Nagoya, Japan 464

(*Received* 6 *April* 1982; *received in revised form* 14 *Feburary* 1983)

Abstract—A set of governing equations for nonlinear theory of spatially curved elastic beams of thin-walled open cross section composed of straight rectangular elements is presented explicitly in the Lagrangian form. It is shown that local deformations, i.e. in-plane distortion of the cross section may easily be taken into account by the use of the analytical model proposed by Epstein and Murray. The essential feature which distinguishes the present work from Epstein and Murray's is the use of an auxiliary element when the axial curve of beams is not located on the cross section. This enables us to select arbitrarily the axial curve of rods. For the engineering theory of rods, the simplified governing equations for the nonlinear and linear theories with and without local deformations are derived from the rigorous nonlinear theory by employing the thinness assumption. It is also shown that the reduced linear theory without local deformations agrees with the Vlasov theory.

1. INTRODUCTION

Thin-walled beams and beam-columns of open cross sections are apt to cause local deformations, i.e. the in-plane distortions of the cross section. Since these deformations have remarkable effects on the strength of buckling, it is of practical importance to present a more accurate nonlinear theory of rods involving such local deformations.

The previous work on the theory of rods can be classified into the following two categories: (1) the one-dimensional theory reduced from the three-dimensional continuum theory[2–5] and (2) the generalized continuum theory[4, 6]. In the former case, the deformed pattern of rods is usually expressed by means of the power-series expansion with respect to the transverse coordinates. With this approach it is possible to include local deformations by retaining the higher order terms of power series. However, because of the extreame increase of the number of unknowns, such a method is very troublesome. In the latter case, it is relatively simple to include local deformations by increasing the number of directors, provided that the appropriate constitutive coefficients are determined. However, such a determination is not an easy task, except for the physically meaningful directors in Epstein's sense[11], because of the difficulty in expressing physical relations between the deformations of directors taken arbitrarily and those of the body.

Recently, Epstein and Murray[7] proposed an analytical model based on the use of a base vector in each element of the cross section to develop the nonlinear theory for spatially curved beams of thin-walled open cross sections consisting of straight rectangular elements. This model seems to be promising in dealing with the local deformations since all the deformations of the body can be expressed by changes of the base vector in each element. However, because of the restriction that the axial curve must be selected on the middle line of one of the elements of the cross section, their model is not applicable to cases in which the current axial curve of rods is not located on an element of the cross section. These cases are examples of rods of unsymmetric cross section, like a channel section, and rods with initial imperfection. Therefore it is desirable to formulate the nonlinear theory of rods in which the axial curve may be selected arbitrarily.

In the present paper, a set of governing equations for the nonlinear theory of spatially curved elastic beams of thin-walled open cross sections composed of straight rectangular elements is formulated explicitly in the Lagrangian form. In this formulation, the Epstein and Murray model is extended to include local deformations by getting rid of a certain number of constraints. The essential feature which distinguishes the present work from Epstein and Murray's is the generalization of the analytical model by the use of an auxiliary element when the axial curve is not located on the middle line of one of the straight thin rectangular elements and is the explicit formulation in the Lagrangian form. The generalized model enables one to take arbitrarily the axial curve of rods.

For practical applications, the simplified governing equations for the nonlinear and linear theories with and without local deformations are reduced from the rigorous nonlinear theory by employing the assumption of thinness. It is shown that the reduced linear theory without local deformations agrees with Vlasov theory, thus illustrating the reliability of the proposed model. Finally, some numerical examples for the bending of elastic beams are presented.

As for tensor notations, Latin indices take the values of 1, 2, 3; whereas Greek indices α, β, λ on the axial coordinate system x take the values of 1, 2 and the indices ξ, η, ζ on the local coordinate system y take 0, 1, 2, ... n.

2. EXTENDED ANALYTICAL MODEL AND ASSUMPTIONS

Let us consider a spatially curved elastic and uniform thin-walled open cross section which is composed of any number n of straight thin rectangular elements in a Euclidian 3-space. Now if the cross section consists of curved elements instead of straight ones, it is possible to treat it approximately by dividing the elements into a few straight elements.

In the present formulation the analytical model is extended from the one used by Epstein and Murray so that the axial curve can be arbitrarily selected by the use of auxiliary element when the axial curve is not located on the middle line of one of the straight, thin rectangular elements, with the following rules: the base vectors $\mathbf{T}_\xi$ and local coordinates y^ξ based on elements ξ in the cross section are prepared in much the same way as[7], if the axial curve C is located on an element of the cross section. But if the axial curve is not located on an arbitrary element of the cross section, it is necessary to prepare an auxiliary element as follows: the base vector $\mathbf{T}_0$ in an auxiliary element 0 which is prepared at an arbitrary point O_0 on the axial curve C is taken into the direction of an arbitrary point O_1 selected on the middle line of an arbitrary element 1, as shown in Fig. 1, and the local coordinate y^0 originated from O_0 which is called the point of application of $\mathbf{T}_0$ increases in the direction of $\mathbf{T}_0$. Subsequently the base vector $\mathbf{T}_l$ in element l is defined at the point O_l along the middle line of element l, and the local coordinate y^l with O_l as its point of origin is positive in the direction of $\mathbf{T}_l$. Thus a set of base vectors $\mathbf{T}_\xi$ and local coordinates y^ξ is defined at each element in the cross section in the same manner as[7].

We suppose that the local deformations of the element itself are negligible. Therefore each element has its straight element in the deformed state. If it is necessary to consider the deformations of the element itself, we do so by assuming that each element has its own mode of deformations or by increasing the number of the base vector by subdividing the element. But since such a deformation is generally of a higher order of deformations of the body, we can neglect it in practical application.

3. DEFORMATIONS OF THIN-WALLED OPEN CROSS SECTIONS

The coordinate systems x and y are prepared as shown in Fig. 1. The axial coordinate system x is taken x^3 into the axial curve and $x^\alpha(\alpha = 1, 2)$ into the transverse axes of the cross section as prescribed by the base vectors $\mathbf{A}_\alpha$. On the other hand, the coordinate system y is composed of the local coordinates y^ξ defined on the middle line of each element ξ in the simply connected cross section prescribed for the value of x^3 as stated before.

Denoting the position vector of the axial point O_0 by $\bar{\mathbf{R}}(x^3)$, the position vector $\mathbf{R}(x^3, x^\alpha)$ of the spatial point in the undeformed cross section with respect to the system x is given in the form

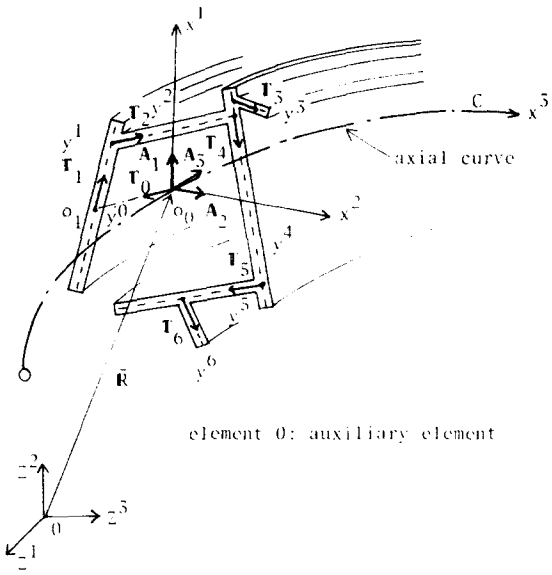

Fig. 1. Elements and local coordinates.

$$\mathbf{R}(x^3, x^\alpha) = \bar{\mathbf{R}}(x^3) + x^\alpha(y^\xi)\mathbf{A}_\alpha(x^3). \tag{3.1}$$

Taking the tangent vector $\mathbf{A}_3$ on the axial curve C defined by

$$\mathbf{A}_3(x^3) = \bar{\mathbf{R}}(x^3)_{,3} \tag{3.2}$$

into a unit vector without losing generality and the base vectors $\mathbf{A}_\alpha$ into the appropriated orthogonal unit vectors, the base vector $\mathbf{G}_i$ at the spatial point and shifters M_i^k may be written from [5] as follows:

$$\begin{aligned} &\mathbf{G}_i = M_i^K \mathbf{A}_k, \quad M_\alpha{}^k = \delta_\alpha{}^k, \quad M_3{}^k = \delta_3{}^k + x^\alpha \Psi_\alpha{}^k, \\ &M = 1 - x^\alpha \Phi_\alpha, \quad \Psi_\alpha{}^k = \Phi_3 e_{k\alpha} - \delta_3{}^k \Phi_\alpha, \quad \mathbf{A}_{\alpha,3} = \Phi_3 e_{\beta\alpha} \mathbf{A}^\beta, \end{aligned} \tag{3.3}$$

where $e_{\alpha\beta}$ is the two-dimensional permutation symbol and Φ_i is given as follows:

$$\Phi_1 = K_1 \cos\vartheta, \quad \Phi_2 = K_1 \sin\vartheta, \quad \varphi_3 = -K_2 + \vartheta_{,3}. \tag{3.4}$$

Here K_1 and K_2 are the principal curvature and torsion of the axial curve C, respectively, and ϑ is an angle between the principal normal of C and the coordinate axis x^1.

The position vector $\mathbf{R}(x^3, y^\xi)$ of the spatial point with respect to y^ξ may be expressed as

$$\mathbf{R}(x^3, y^\xi) = \bar{\mathbf{R}}(x^3) + y^\xi \mathbf{T}_\xi, \quad (\xi = 0, 1, 2, \ldots n) \tag{3.5}$$

in which ξ takes the values 0, 1, 2, 3, ... n, corresponding to the local coordinates y^ξ inclusive of an auxiliary element. Because of the fact that the position vector $\mathbf{R}(x^3, x^\alpha)$ with respect to the axial coordinate system and the vector $\mathbf{R}(x^3, y^\alpha)$ with respect to the local coordinate system denote the position vector at the same point in the cross section, we can obtain the following expressions from (3.1) and (3.5):

$$\mathbf{R}(x^3, y^\xi) = \bar{\mathbf{R}}(x^3) + x^\alpha(y^\xi)\mathbf{A}_\alpha = \bar{\mathbf{R}}(x^3) + y^\xi \mathbf{T}_\xi. \tag{3.6}$$

When the base vectors $\mathbf{T}_3$ and $\mathbf{T}_\xi (\xi = 0, 1, 2, \ldots n)$ are defined by

$$\mathbf{T}_3 = \mathbf{R}(x^3, y^\xi)_{,3} \qquad \mathbf{T}_\xi = \mathbf{R}(x^3, y^\xi)_{,\xi}, \tag{3.7}$$

they are expressed as

$$\mathbf{T}_3 = \mathbf{G}_3 = M_3{}^k \mathbf{A}_k, \qquad \mathbf{T}_\xi = C_\xi{}^\alpha \mathbf{A}_\alpha \tag{3.8}$$

from (3.1), in which $C_\xi{}^\alpha$ is the rotation tensor of element ξ which expresses the relation between $\mathbf{T}_\xi$ and $\mathbf{A}_\alpha$ and is defined as follows:

$$C_\xi{}^\alpha = x^\alpha{}_{,\xi}. \tag{3.9}$$

The rotation tensor is given in general form as

$$C_\xi{}^i = x^i{}_{,\xi} = [\cos\theta_\xi \quad \sin\theta_\xi \quad 0] \tag{3.10}$$

with an angle θ_ξ between $\mathbf{G}_1(=\mathbf{A}_1)$ and $\mathbf{T}_\xi$, as shown in Fig. 2. The inverse of (3.8) is expressed as

$$\mathbf{A}_\alpha = \mathbf{T}_\xi (C^{-1})_\alpha{}^\xi \tag{3.11}$$

with $(C^{-1})_\alpha{}^\xi$ defined by

$$(C^{-1})_\alpha{}^\xi = \frac{\partial y^\xi}{\partial x^\alpha} = C_\xi{}^\alpha. \tag{3.12}$$

Substituting (3.8) into (3.6), the relations for transformation between the coordinate systems x^α and y^ξ are obtained as

$$x^\alpha = y^\xi C_\xi{}^\alpha, \quad y^\xi = x^\alpha (C^{-1})_\alpha{}^\xi. \tag{3.13}$$

Now denoting the relationship between the base vectors $\mathbf{A}_\alpha$ and a unit normal vector $\mathbf{N}_\xi$ on element ξ, which is taken in right-hand rule as shown in Fig. 2, by

$$\mathbf{N}_\xi = \bar{C}_\xi{}^\alpha \mathbf{A}_\alpha, \tag{3.14}$$

the rotation tensor $\bar{C}_\xi{}^i$ can be given in

$$\bar{C}_\xi{}^i = [-\sin\theta_\xi \quad \cos\theta_\xi \quad 0] = C_\xi{}^\lambda e_{\lambda\beta}\delta^{i\beta} \tag{3.15}$$

with the well-known rotation tensor. Meanwhile, indicating the relation between $\mathbf{N}_\xi$ and $\mathbf{T}_\xi$ by

$$\mathbf{N}_\xi = \tilde{C}_\xi{}^\zeta \mathbf{T}_\zeta, \tag{3.16}$$

the tensors $\bar{C}_\xi{}^\alpha$ and $\tilde{C}_\xi{}^\zeta$ may be written as

$$\bar{C}_\xi{}^\alpha = \tilde{C}_\xi{}^\zeta C_\zeta{}^\alpha = C_\xi{}^\lambda e_{\lambda\beta}\delta^{\alpha\beta}, \quad \tilde{C}_\xi{}^\zeta = \bar{C}_\xi{}^\alpha (C^{-1})_\alpha{}^\zeta = (C^{-1})_\alpha{}^\zeta C_\xi{}^\lambda e_{\lambda\beta}\delta^{\alpha\beta} \tag{3.17}$$

by means of $C_\xi{}^\lambda$ and $(C^{-1})_\lambda{}^\xi$ from (3.8), (3.14) and (3.15).

As the position vector $\mathbf{r}(x^3, y^\xi)$ of the spatial point with respect to y^ξ in the deformed state is expressed in the following form

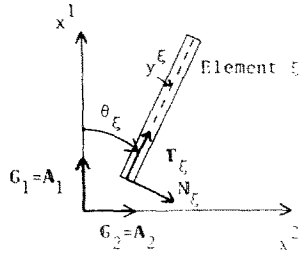

Fig. 2. Angle θ_ξ.

$$\mathbf{r}(x^3, y^\xi) = \bar{\mathbf{r}}(x^3) + y^\xi \mathbf{t}_\xi(x^3), \tag{3.18}$$

the displacement vector $\mathbf{V}$ of the spatial point can be reduced to

$$\mathbf{V}(x^3, y^\xi) = \mathbf{U}(x^3) + y^\xi \mathbf{\Omega}_\xi(x^3) \tag{3.19}$$

from (3.5) and (3.18), where the displacement vector $\mathbf{U}(x^3)$ of the axial point and the displacement vector $\mathbf{\Omega}_\xi$ of the base vector $\mathbf{T}_\xi$ in element ξ are defined as follows:

$$\mathbf{V}(x^3, y^\xi) = \mathbf{r}(x^3, y^\xi) - \mathbf{R}(x^3, y^\xi), \quad \mathbf{U}(x^3) = \bar{\mathbf{r}}(x^3) - \bar{\mathbf{R}}(x^3), \quad \mathbf{\Omega}_\xi(x^3) = \mathbf{t}_\xi(x^3) - \mathbf{T}_\xi(x^3). \tag{3.20}$$

Therefore, the differentiations of the displacement vector $\mathbf{V}$ with respect to x^3 and y^ξ yield

$$\mathbf{V}_{,3} = \mathbf{U}_{,3} + y^\xi \Omega_{\xi,3} \quad \mathbf{V}_{,\xi} = \mathbf{\Omega}_\xi. \tag{3.21}$$

Now denoting the vectors $\mathbf{V}$, $\mathbf{U}$, and $\mathbf{\Omega}_\xi$ and their differentiations with respect to x^3 by

$$\begin{aligned} \mathbf{V} &= V_i \mathbf{A}^i = V^i \mathbf{A}_i, & \mathbf{V}_{,3} &= V_{i\|3}\mathbf{A}^i = V^i{}_{\|3}\mathbf{A}_i \\ \mathbf{U} &= U_i \mathbf{A}^i = U^i \mathbf{A}_i, & \mathbf{U}_{,3} &= U_{i\|3}\mathbf{A}^i = U^i{}_{\|3}\mathbf{A}_i \\ \mathbf{\Omega}_\xi &= \Omega_{\xi i}\mathbf{A}^i = \Omega_\xi{}^i \mathbf{A}_i, & \mathbf{\Omega}_{\xi,3} &= \Omega_{\xi i\|3}\mathbf{A}^i = \Omega_\xi{}^i{}_{\|3}\mathbf{A}_i, \end{aligned} \tag{3.22}$$

the displacement components V_i and V^i and the covariant derivatives $V_{i\|3}$, $V^i{}_{\|3}$, $V_{i\|\xi}$ and $V^i{}_{\|\xi}$ can be reduced to

$$\begin{aligned} V_i &= U_i + y^\xi \Omega_{\xi i}, & V^i &= U^i + y^\xi \Omega_\xi{}^i \\ V_{i\|3} &= U_{i\|3} + y^\xi \Omega_{\xi i\|3}, & V^i{}_{\|3} &= U^i{}_{\|3} + y^\xi \Omega_\xi{}^i{}_{\|3} \\ V_{i\|\xi} &= \Omega_{\xi i}, & V^i{}_{\|\xi} &= \Omega_\xi{}^i, \end{aligned} \tag{3.23}$$

wherein $U_{i\|3}$, $U^i{}_{\|3}$, $\Omega_{\xi i\|3}$ and $\Omega_\xi{}^i{}_{\|3}$ are given explicitly in

$$\begin{aligned} U_{i\|3} &= U_{i,3} - \overset{*}{\Gamma}{}^k_{i3} U_k, & U^i{}_{\|3} &= U^i{}_{,3} + \overset{*}{\Gamma}{}^i_{k3} U^k \\ \Omega_{\xi i\|3} &= \Omega_{\xi i,3} - \overset{*}{\Gamma}{}^k_{i3} \Omega_{\xi k}, & \Omega_\xi{}^i{}_{\|3} &= \Omega_\xi{}^i{}_{,3} + \overset{*}{\Gamma}{}^i_{k3} \Omega_\xi{}^k \end{aligned} \tag{3.24}$$

and the pseudo Christoffel symbols $\overset{*}{\Gamma}{}^k_{i3}$ which are defined only on the axial curve take the values

$$\overset{*}{\Gamma}{}^\alpha_{i3} = \Phi_\alpha \delta_i{}^3 + \Phi_3 e_{\alpha i}, \quad \overset{*}{\Gamma}{}^3_{i3} = -\Phi_\alpha \delta_i{}^\alpha, \quad \overset{*}{\Gamma}{}^k_{i\alpha} = 0 \tag{3.25}$$

from [5].

Since the position vector $\mathbf{r}(x^3, y^\xi)$ in the deformed state may be written as

$$\mathbf{r}(x^3, y^\xi) = \mathbf{R}(x^3, y^\xi) + \mathbf{U}(x^3) + y^\xi \mathbf{\Omega}_\xi(x^3) \tag{3.26}$$

from (3.18) and (3.20), the base vectors $\mathbf{t}_3$ and $\mathbf{t}_\xi$ with respect to the y system in the deformed state are

$$\mathbf{t}_3 = \mathbf{r}_{,3} = \mathbf{T}_3 + \mathbf{U}_{,3} + y^\xi \mathbf{\Omega}_{\xi,3}, \qquad \mathbf{t}_\xi = \mathbf{r}_{,\xi} = \mathbf{T}_\xi + \mathbf{\Omega}_\xi. \tag{3.27}$$

Meanwhile, from (3.3) and (3.8), the differentiations of the base vectors $\mathbf{T}_\xi$ become

$$\mathbf{T}_{\xi,3} = C_\xi{}^\alpha \mathbf{A}_{\alpha,3} = C_\xi{}^\alpha \Phi_3 e_{\beta\alpha} \mathbf{A}^\beta. \tag{3.28}$$

4. STRAIN-DISPLACEMENT RELATIONS

The Cauchy–Green strain tensors are defined as

$$E_{33} = \frac{1}{2}(t_{33} - T_{33}), \qquad E_{3\xi} = \frac{1}{2}(t_{3\xi} - T_{3\xi}), \qquad E_{\xi\eta} = \frac{1}{2}(t_{\xi\eta} - T_{\xi\eta}) \tag{4.1}$$

with respect to the y system, in which the physical meaning of strain tensors $E_{\xi\eta}$ is the transverse normal strain of element ξ itself, corresponding to the stress tensor $s^{\xi\xi}$, as shown in Fig. 3, for $\xi = \eta$ and is the in-plane shearing strain between elements ξ and η for $\xi \neq \eta$. Wherein one has to realize that the strain tensors defined in (4.1) imply mean strains.

Employing (3.3), (3.8) and (3.25) in the above equations, the strain distributions with respect to the y system may be obtained as

$$E_{33} = \overset{(1)}{E}_{33} + y^{\xi}\overset{(1)}{E}_{33\xi} + y^{\xi}y^{\eta}\overset{(1)}{E}_{33\xi\eta}, \qquad E_{3\xi} = \overset{(2)}{E}_{3\xi} + y^{\eta}\overset{(2)}{E}_{3\xi\eta}, \qquad E_{\xi\eta} = \overset{(3)}{E}_{\xi\eta}, \tag{4.2}$$

where the strain measures are defined as follows:

$$\begin{aligned}
\overset{(1)}{E}_{33} &= U_{3\|3} + \frac{1}{2}U_{i\|3}U^{i}_{\|3} \\
\overset{(1)}{E}_{33\xi} &= \Omega_{\xi 3\|3} + (\underline{C^{\alpha}_{\xi}\psi_{\alpha}{}^{i}} + \Omega^{i}_{\xi\|3})U_{i\|3} \\
\overset{(1)}{E}_{33\xi\eta} &= (\underline{C_{\xi}{}^{\alpha}\psi_{\alpha}{}^{i}} + \frac{1}{2}\Omega^{i}_{\xi\|3})\Omega_{\eta i\|3} \\
\overset{(2)}{E}_{3\xi} &= \frac{1}{2}(\Omega_{\xi 3} + U_{\alpha\|3}C^{\alpha}_{\xi} + U_{i\|3}\Omega^{i}_{\xi}) \\
\overset{(2)}{E}_{3\xi\eta} &= \frac{1}{2}(\underline{C_{\eta}{}^{\alpha}\psi_{\alpha}{}^{i}\Omega_{\xi i}} + \Omega_{\eta\alpha\|3}C^{\alpha}_{\xi} + \Omega_{\eta i\|3}\Omega^{i}_{\xi}) \\
\overset{(3)}{E}_{\xi\eta} &= \frac{1}{2}(C_{\xi}{}^{\alpha}\Omega_{\eta\alpha} + C_{\eta}{}^{\alpha}\Omega_{\xi\alpha} + \Omega_{\xi i}\Omega_{\eta}{}^{i}).
\end{aligned} \tag{4.3}$$

5. THE PRINCIPLE OF VIRTUAL WORK

Let us derive the governing equations of thin-walled open cross sections through the principle of virtual work. Since the strain tensors given in (4.2) have been defined as the mean strains which neglect its thickness-wise variation, we need to consider the effect of this variation by either assuming the thickness-wise variation of strains or adding the St. Venant torsional moment to the internal work. In the present paper the latter has been chosen for its simplicity as explained in [7].

The St. Venant torsional moment T^{ξ} of an element ξ is given by

$$T^{\xi} = GJ_{\xi}\omega_{\xi}, \quad \text{(no sum on } \xi) \tag{5.1}$$

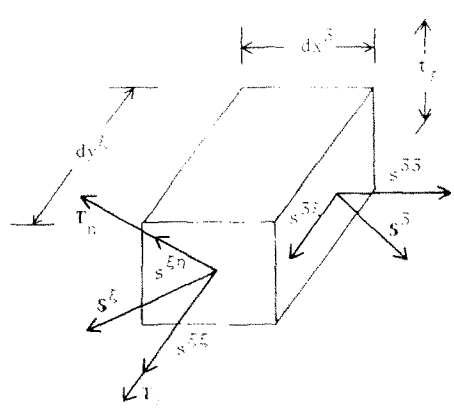

Fig. 3. The physical meaning of $s^{\xi\eta}$.

in which the torsional constant, J_ξ, of the element ξ is

$$J_\xi = \frac{1}{3}\int [t_\xi(y^\xi)]^3 \, dy^3 \tag{5.2}$$

and the change in specific twist, ω_ξ, of the element ξ is expressed in

$$\omega_\xi = \mathbf{n}_\xi \mathbf{t}_{\xi,3} - \mathbf{N}_\xi \mathbf{T}_{\xi,3} = \tilde{C}_\xi^{\ \eta}[\mathbf{t}_\eta \mathbf{t}_{\xi,3} - \mathbf{T}_\eta \mathbf{T}_{\xi,3}] \quad \text{(no sum on } \xi) \tag{5.3}$$

by means of the unit vector $\mathbf{N}_\xi(\mathbf{n}_\xi)$ normal to the base vector $\mathbf{T}_\xi(t_\xi)$ in the element ξ from[7]. Using (3.8), (3.15), (3.22) and (3.28), the above equation becomes

$$\omega_\xi = C_\xi^{\ \lambda}[e_{\lambda\alpha}\Omega_\xi^{\ \alpha}{}_{\|3} + \underline{(C^{-1})_\alpha^{\ \eta} C_\xi^{\ \mu}\Phi_3 e_{\lambda\beta}\delta^{\alpha\beta} e_{\gamma\mu}\Omega_\eta^{\ \gamma}} + (C^{-1})_\alpha^{\ \eta} e_{\lambda\beta}\delta^{\alpha\beta}\Omega_{\eta i}\Omega_{\xi\|3}^{\ i}]. \tag{5.4}$$

Hence, the internal virtual work done by the St. Venant torsional moment for thin-walled open cross sections may be written as

$$\begin{aligned}\int_0^l T^\xi \delta\omega_\xi \, dx^3 = \int_0^l \Big\{ &\sum_{\xi=1}^n [\delta\Omega_{\xi\|3}^{\ i} C_\xi^{\ \lambda} T^\xi [e_{\lambda i} + (C^{-1})_\alpha^{\ \eta} e_{\lambda\beta}\delta^{\alpha\beta}\Omega_{\eta i}]] \\ &+ \sum_{\eta=1}^n [\delta\Omega_\xi^{\ i}(C^{-1})_\alpha^{\ \xi} C_\eta^{\ \lambda} T^\eta e_{\lambda\beta}\delta^{\alpha\beta}[C_\eta^{\ \mu}\Phi_3 e_{i\mu} + \Omega_{\eta i\|3}]]\Big\} \, dx^3.\end{aligned} \tag{5.5}$$

The internal virtual work δW_i yields

$$\begin{aligned}\delta W_i &= \int s^{ab}\delta E_{ab} \, dV = \int_0^l \int_s [s^{33}\delta E_{33} + 2s^{3\xi}\delta E_{3\xi} + s^{\xi\eta}\delta E_{\xi\eta}] \, M \, dS \, dx^3 + \int_0^l T^\xi \delta_{\omega\xi} \, dx^3 \\ &= \int_0^l [N^{33}\delta \overset{(1)}{E}_{33} + \bar{M}^{\xi 3}\delta \overset{(1)}{E}_{33\xi} + \bar{B}^{\xi\eta}\delta \overset{(1)}{E}_{33\xi\eta} + 2\bar{N}^{3\xi}\delta \overset{(2)}{E}_{3\xi} + 2\bar{M}^{\eta\xi}\delta \overset{(2)}{E}_{3\xi\eta} + \bar{N}^{\xi\eta}\delta \overset{(3)}{E}_{\xi\eta} + T^\xi \delta\omega_\xi] \, dx^3\end{aligned} \tag{5.6}$$

by means of the Kirchhoff stress tensor s^{ab}, where the stress resultants and stress couples are defined as follows:

$$\begin{aligned}N^{33} &= \int s^{33} M \, dS = \sum_{\zeta=1}^n \int_{(\zeta)} s^{33} M \, dS^{(\zeta)} \\ \bar{M}^{\xi 3} &= \int s^{33} y^\xi M \, dS = \sum_{\zeta=1}^n \int_{(\zeta)} s^{33} y^\xi M \, dS^{(\zeta)} \\ \bar{B}^{\xi\eta} &= \int s^{33} y^\xi y^\eta M \, dS = \sum_{\zeta=1}^n \int_{(\zeta)} s^{33} y^\xi y^\eta M \, dS^{(\zeta)} \\ \bar{N}^{3\xi} &= \int s^{3\xi} M \, dS = \int_{(\xi)} s^{3\xi} M \, dS^{(\xi)} \qquad \text{(for } \xi \text{ real elements)} \\ \bar{M}^{\eta\xi} &= \int s^{3\xi} y^\eta M \, dS = \int_{(\xi)} s^{3\xi} y^\eta M \, dS^{(\xi)} \qquad \text{(for } \xi \text{ real elements)} \\ \bar{N}^{\xi\eta} &= \int s^{\xi\eta} M \, dS = \sum_{\zeta=1}^n \int_{(\zeta)} s^{\xi\eta} M \, dS^{(\zeta)},\end{aligned} \tag{5.7}$$

wherein since the shearing stress $s^{3\xi}$ is defined in an element ξ only and disappears in the other elements, the total integral in the cross section is reduced to the integral in the element ξ alone. Meanwhile, the stress tensor $s^{\xi\eta}$ is the component of the stress vector $\mathbf{S}^\xi$ in the element ξ with respect to the base vector $\mathbf{T}_\eta$ in an element η, as shown in Fig. 3. Employing (4.3) into (5.6), the internal virtual work can be expressed as

$$\delta W_i = [\overset{(1)}{A}{}^i]_0^l \delta U_i + [\overset{(2)}{A}{}^{\xi i}]_0^l \delta\Omega_{\xi i} - \int_0^l [\overset{(1)}{A}{}^i_{\|3}\delta U_i + (\overset{(2)}{A}{}^{\xi i}_{\|3} - \overset{(3)}{A}{}^{\xi i})\delta\Omega_{\xi i}]\,\mathrm{d}x^3 \tag{5.8}$$

where

$$\begin{aligned}
\overset{(1)}{A}{}^i &= N^{33}(\delta_3{}^i + U^i{}_{\|3} + \bar{N}^{3\xi}(C_\xi{}^i + \Omega_\xi{}^i) + \bar{M}^{\xi 3}(C_\xi{}^\alpha \Psi_\alpha{}^i + \Omega_{\xi\|3}^i) \\
\overset{(2)}{A}{}^{\xi i} &= \bar{M}^{\xi 3}(\delta_3{}^i + U^i{}_{\|3}) + \bar{M}^{\xi\eta}(C_\eta{}^i + \Omega_\eta{}^i) + \bar{B}^{\xi\eta}(C_\eta{}^\alpha \Psi_\alpha{}^i + \Omega_\eta{}^i{}_{\|3}) \\
&\quad + \delta^{ij}\delta_\phi{}^\xi C_\phi{}^\lambda T^\phi[e_{\lambda j} + (C^{-1})_\alpha{}^\eta e_{\lambda\beta}\delta^{\alpha\beta}\Omega_{\eta j}]
\end{aligned} \tag{5.9}$$

$$\begin{aligned}
\overset{(3)}{A}{}^{\xi i} &= \bar{N}^{3\xi}(\delta_3{}^i + U^i{}_{\|3}) + \bar{N}^{\xi\eta}(C_\eta{}^i + \Omega_\eta{}^i) + \bar{M}^{\eta\xi}(C^\alpha \Psi_\alpha{}^i + \Omega^i_{\eta\|3}) \\
&\quad + \sum_{\eta=1}^{n} \delta^{ij}(C^{-1})_\alpha{}^\xi C_\eta{}^\lambda T^\eta e_{\lambda\beta}\delta^{\alpha\beta}[C_\eta{}^\mu \Phi_3 e_{j\mu} + \Omega_{\eta j\|3}].
\end{aligned} \tag{5.9}$$

Meanwhile, the external virtual work δW_e may be written as

$$\delta W_e = \int_v (\mathbf{p} - \mathbf{c})\delta V\,\mathrm{d}V + \int_{S_\sigma} \overset{*}{\mathbf{T}}\delta V\,\mathrm{d}S, \tag{5.10}$$

in which $\mathbf{p}(x^3, y^\xi)$ and $\mathbf{c}(x^3, y^\xi)$ are the external force and acceleration per unit area in the undeformed body, respectively, and S_σ is the boundary surface at the end points where the stress vectors $\overset{*}{\mathbf{T}}$ are prescribed. Now denoting the components of $\mathbf{p}$, $\mathbf{c}$ and $\overset{*}{\mathbf{T}}$ with respect to the base vector $\mathbf{A}_i$ by

$$\mathbf{p} = p^i\mathbf{A}_i, \qquad \mathbf{c} = c^i\mathbf{A}_i, \qquad \overset{*}{\mathbf{T}} = \overset{*}{T}{}^i\mathbf{A}_i \tag{5.11}$$

and using (3.19), we hold that

$$\delta W_e = \int_0^l [(p^i - c^i)\delta U_i + (m^{\xi i} - b^{\xi i})\delta\Omega_{\xi i}]\,\mathrm{d}x^3 + [\overset{*}{N}{}^i\delta U_i + \overset{*}{\bar{M}}{}^{\xi i}\delta\Omega_{\xi i}]_{x^3=0,l} \tag{5.12}$$

where

$$\begin{aligned}
p^i &= \int P^i M\,\mathrm{d}S = \sum_{\zeta=1}^{n}\int_{(\zeta)} P^i M\,\mathrm{d}S^{(\zeta)} \\
c^i &= \int C^i M\,\mathrm{d}S = \sum_{\zeta=1}^{n}\int_{(\zeta)} C^i M\,\mathrm{d}S^{(\zeta)} \\
\bar{m}^{\xi i} &= \int P^i y^\xi M\,\mathrm{d}S = \sum_{\zeta=1}^{n}\int_{(\zeta)} P^i y^\xi M\,\mathrm{d}S^{(\zeta)} \\
\bar{b}^{\xi i} &= \int C^i y^\xi M\,\mathrm{d}S = \sum_{\zeta=1}^{n}\int_{(\zeta)} C^i y^\xi M\,\mathrm{d}S^{(\zeta)} \\
\overset{*}{N}{}^i &= \int \overset{*}{T}{}^i M\,\mathrm{d}S = \sum_{\zeta=1}^{n}\int_{(\zeta)} \overset{*}{T}{}^i M\,\mathrm{d}S^{(\zeta)} \\
\overset{*}{\bar{M}}{}^{\xi i} &= \int \overset{*}{T}{}^i y^\xi M\,\mathrm{d}S = \sum_{\zeta=1}^{n}\int_{(\zeta)} \overset{*}{T}{}^i y^\xi M\,\mathrm{d}S^{(\zeta)}.
\end{aligned} \tag{5.13}$$

Employing (5.8) and (5.12) into the principle of virtual work

$$\delta W_i - \delta W_e = 0 \tag{5.14}$$

gives the equations of motion and the boundary conditions as follows:

The equations of motion:

$$\delta U_i: [N^{33}(\delta_3{}^i + U^i{}_{\|3}) + \bar{N}^{3\xi}(C_\xi{}^i + \Omega_\xi{}^i) + \bar{M}^{\xi 3}(\underline{C_\xi{}^\alpha \Psi_\alpha{}^i} + \Omega_{\xi\|3}^i)]_{\|3} + p^i = c^i \tag{5.15}$$

$$\begin{aligned}\delta\Omega_{\xi i}: [&\bar{M}^{\xi 3}(\delta_3{}^i + U^i{}_{\|3}) + \bar{M}^{\xi\eta}(C_\eta{}^i + \Omega_\eta{}^i) + \bar{B}^{\xi\eta}(\underline{C_\eta{}^\alpha \Psi_\alpha{}^i} + \Omega_{\eta\|3}^i) \\ &+ \delta^{ij}\delta_\phi{}^\xi C_\phi{}^\lambda T^\phi\{e_{\lambda j} + (C^{-1})_\alpha{}^\eta e_{\lambda\beta}\delta^{\alpha\beta}\Omega_{\eta j}\}]_{\|3} - \bar{N}^{3\xi}(\delta_3{}^i + U^i{}_{\|3}) - \underline{\underline{\bar{N}^{\xi\eta}(C_\eta{}^i + \Omega_\eta{}^i)}} \\ &- \bar{M}^{\eta\xi}(\underline{C_\eta{}^\alpha \psi_\alpha{}^i} + \Omega^i_{\eta\|3}) - \sum_{\eta=1}^{n} \delta^{ij}(C^{-1})_\alpha{}^\xi C_\eta{}^\lambda T^\eta e_{\lambda\beta}\delta^{\alpha\beta}\{\underline{C_\eta{}^\mu \Phi_3 e_{j\mu}} + \Omega_{\eta j|3}\} + \bar{m}^{\xi i} = \bar{b}^{\xi i}.\end{aligned} \tag{5.16}$$

The boundary conditions: at $x^3 = l$

$$\overset{*}{N}{}^i = N^{33}(\delta_3{}^i + U^i{}_{\|3}) + \bar{N}^{3\xi}(C_\xi{}^i + \Omega_\xi{}^i) + \bar{M}^{\xi 3}(\underline{C_\xi{}^\alpha \Psi_\alpha{}^i} + \Omega_{\xi\|3}^i) \text{ or } \overset{*}{U}_i = U_i \tag{5.17}$$

$$\begin{aligned}\overset{*}{\bar{M}}{}^{\xi i} = {}&\bar{M}^{\xi 3}(\delta_3{}^i + U^i{}_{\|3}) + \bar{M}^{\xi\eta}(C_\eta{}^i + \Omega_\eta{}^i) + \bar{B}^{\xi\eta}(\underline{C_\eta{}^\alpha \Psi_\alpha{}^i} + \Omega^i_{\eta\|3}) \text{ or } \overset{*}{\Omega}_{\xi i} = \Omega_{\xi i} \\ &+ \delta^{ij}\delta_\phi{}^\xi C_\phi{}^\lambda T^\phi[e_{\lambda j} + (C^{-1})_\alpha{}^\eta e_{\lambda\beta}\delta^{\alpha\beta}\Omega_{\eta j}]\end{aligned} \tag{5.18}$$

If the prescribed stress resultants $\overset{*}{N}{}^i$ and stress couples $\overset{*}{M}{}^{\xi i}$ at $x^3 = 0$ are chosen in the opposite direction to the positive direction of displacements U_i, namely, conversely $\overset{*}{N}{}^i$ and $\overset{*}{M}{}^{\xi i}$ at $x^3 = l$, as

$$\begin{aligned}\overset{*}{N}{}^i &\to -\overset{*}{N}{}^i \\ \overset{*}{M}{}^{\xi i} &\to -\overset{*}{M}{}^{\xi i}\end{aligned} \qquad \text{at } x^3 = 0, \tag{5.19}$$

then the boundary conditions at $x^3 = 0$ are reduced to (5.17) and (5.18).

Although the stress resultants and stress couples given in (5.7) are expressed in the forms with respect to the local coordinate system, namely, the micro forms except for N^{33}, but in the theory of rods the macroscopic expressions with respect to the axial coordinate system x are generally employed. Now defining the macroscopic stress resultants and the macroscopic stress couples in the bivector form as

$$\begin{aligned}N^{3\alpha} &= \int s^{3\xi} C_\xi{}^\alpha M \, dS = \left[\int_{(\xi)} s^{3\xi} M \, dS^{(\xi)}\right] C_\xi{}^\alpha \\ M^{\alpha 3} &= \int s^{33} x^\alpha M \, dS = \sum_{\zeta=1}^{n} \int_{(\zeta)} s^{33} x^\alpha M \, dS^{(\zeta)} \\ M^{\beta\alpha} &= \int s^{3\xi} C_\xi{}^\alpha x^\beta M \, dS = \left[\int_{(\xi)} s^{3\xi} x^\beta M \, dS^{(\xi)}\right] C_\xi{}^\alpha \\ B^{\alpha\beta} &= \int s^{33} x^\alpha x^\beta M \, dS = \sum_{\zeta=1}^{n} \int_{(\zeta)} s^{33} x^\alpha x^\beta M \, dS^{(\zeta)} \\ N^{\alpha\beta} &= \int s^{\xi\eta} C_\xi{}^\alpha C_\eta{}^\beta M \, dS = \sum_{\zeta=1}^{n} \int_{(\zeta)} s^{\xi\eta} M \, dS^{(\zeta)} C_\xi{}^\alpha C_\eta{}^\beta,\end{aligned} \tag{5.20}$$

the relations between the micro- and macro-expressions for stress resultants and stress couples may be obtained as follows:

$$\begin{aligned}N^{3\alpha} &= \bar{N}^{3\xi} C_\xi{}^\alpha & \bar{N}^{3\xi} &= N^{3\alpha}(C^{-1})_\alpha{}^\xi \\ N^{\alpha\beta} &= \bar{N}^{\xi\eta} C_\xi{}^\alpha C_\eta{}^\beta & \bar{N}^{\xi\eta} &= N^{\alpha\beta}(C^{-1})_\alpha{}^\xi (C^{-1})_\beta{}^\eta \\ M^{\alpha 3} &= \bar{M}^{\xi 3} C_\xi{}^\alpha & \bar{M}^{\xi 3} &= M^{\alpha 3}(C^{-1})_\alpha{}^\xi \\ M^{\beta\alpha} &= \bar{M}^{\eta\xi} C_\xi{}^\alpha C_\eta{}^\beta & \bar{M}^{\eta\xi} &= M^{\beta\alpha}(C^{-1})_\alpha{}^\xi (C^{-1})_\beta{}^\eta \\ B^{\alpha\beta} &= \bar{B}^{\xi\eta} C_\xi{}^\alpha C_\eta{}^\beta & \bar{B}^{\xi\eta} &= B^{\alpha\beta}(C^{-1})_\alpha{}^\xi (C^{-1})_\beta{}^\eta.\end{aligned} \tag{5.21}$$

The stress couples M_j in the dual vector used generally in rods are expressed as

$$M_j = M^{\alpha i} e_{\alpha ij} + T\delta_j^{\ 3}, \tag{5.22}$$

wherein T is the St. Venant torsional moment given by

$$T = \sum_{\xi=1}^{n} T^{\xi}. \tag{5.23}$$

Hence, from (5.22), the bending moments M_β which are defined the clockwise rotation with respect to x^β as the positive are

$$M_\beta = M^{\alpha 3} e_{\beta\alpha} = \bar{M}^{\xi 3} C_\xi^{\ \alpha} e_{\beta\alpha} \tag{5.24}$$

and the torsional moment M_3 is

$$M_3 = M^{\beta\alpha} e_{\beta\alpha} + T = \bar{M}^{\zeta\xi} C_\xi^{\ \alpha} C_\zeta^{\ \beta} e_{\beta\alpha} + T. \tag{5.25}$$

Similarly, the external moments in the micro-form given in (5.13) are concerned with the macroscopic expressions by

$$\begin{aligned} m^{\alpha i} &= \bar{m}^{\xi i} C_\xi^{\ \alpha} & \bar{m}^{\xi i} &= m^{\alpha i} (C^{-1})_\alpha^{\ \xi} \\ b^{\alpha i} &= \bar{b}^{\xi i} C_\xi^{\ \alpha} & \bar{b}^{\xi i} &= b^{\alpha i} (C^{-1})_\alpha^{\ \beta} \\ \overset{*}{M}{}^{\alpha i} &= \bar{\overset{*}{M}}{}^{\xi i} C_\xi^{\ \alpha} & \bar{\overset{*}{M}}{}^{\xi i} &= \overset{*}{M}{}^{\alpha i} (C^{-1})_\alpha^{\ \xi} \end{aligned} \tag{5.26}$$

and may be related to the dual forms as follows:

$$\begin{aligned} m_j &= m^{\alpha i} e_{\alpha ij} = m^{\xi i} C_\xi^{\ \alpha} e_{\alpha ij} \\ \overset{*}{b}_j &= \overset{*}{b}{}^{\alpha i} e_{\alpha ij} = \overset{*}{b}{}^{\xi i} C_\xi^{\ \alpha} e_{\alpha ij} \\ \overset{*}{M}_j &= \overset{*}{M}{}^{\alpha i} e_{\alpha ij} = \bar{\overset{*}{M}}{}^{\xi i} C_\xi^{\ \alpha} e_{\alpha ij}. \end{aligned} \tag{5.27}$$

6. CONSTITUTIVE EQUATIONS

The Kirchhoff stress tensors s^{ab} may be expressed as

$$s^{ab} = C^{abcd} E_{cd} = C^{ab33} E_{33} + 2C^{ab3\xi} E_{3\xi} + C^{ab\xi\eta} E_{\xi\eta} \tag{6.1}$$

with the Cauchy–Green strain tensors in the absence of a prescribed steady temperature field. For an isotropic body, the elastic tensors C^{abcd} are given in

$$C^{abcd} = G\left[T^{ac}T^{bd} + T^{ad}T^{bc} + \frac{\lambda}{G} T^{ab}T^{cd}\right] \tag{6.2}$$

with the metric tensor T^{ac} in an element ξ.

Hence, substituting (6.1) into (5.7), the constitutive equations are given in Table 1 with the constants J defined as follows:

$$\begin{Bmatrix} \overset{(\zeta)}{J}{}^{abcd} \\ \overset{(\zeta)}{J}{}^{abcd\xi} \\ \overset{(\zeta)}{J}{}^{abcd\xi\eta} \\ \overset{(\zeta)}{J}{}^{abcd\xi\eta\phi} \\ \overset{(\zeta)}{J}{}^{abcd\xi\eta\phi\nu} \end{Bmatrix} = \int_{(\zeta)} C^{abcd} \begin{Bmatrix} 1 \\ y^\xi \\ y^\xi y^\eta \\ y^\xi y^\eta y^\phi \\ y^\xi y^\eta y^\phi y^\nu \end{Bmatrix} M \, dS^{(\zeta)}. \tag{6.3}$$

Table 1. Constitutive equations

	$\overset{(1)}{E}_{33}$	$\overset{(1)}{E}_{33\xi}$	$\overset{(1)}{E}_{33\xi\eta}$	$\overset{(2)}{E}_{3\xi}$	$\overset{(2)}{E}_{3\xi\eta}$	$\overset{(3)}{E}_{\xi\eta}$
$N^{33}=\sum_{\zeta=1}^{n}\{$	$\overset{(\zeta)}{J}{}^{3333}$	$\overset{(\zeta)}{J}{}^{3333\xi}$	$\overset{(\zeta)}{J}{}^{3333\xi\eta}$	$2\overset{(\zeta)}{J}{}^{333\xi}$	$2\overset{(\zeta)}{J}{}^{333\xi\eta}$	$\overset{(\zeta)}{J}{}^{33\xi\eta}\}$
$\bar{M}^{\phi 3}=\sum_{\zeta=1}^{n}\{$	$\overset{(\zeta)}{J}{}^{3333\phi}$	$\overset{(\zeta)}{J}{}^{3333\xi\phi}$	$\overset{(\zeta)}{J}{}^{3333\xi\eta\phi}$	$2\overset{(\zeta)}{J}{}^{333\xi\phi}$	$2\overset{(\zeta)}{J}{}^{333\xi\eta\phi}$	$\overset{(\zeta)}{J}{}^{33\xi\eta\phi}\}$
$\bar{B}^{\phi\nu}=\sum_{\zeta=1}^{n}\{$	$\overset{(\zeta)}{J}{}^{3333\phi\nu}$	$\overset{(\zeta)}{J}{}^{3333\xi\phi\nu}$	$\overset{(\zeta)}{J}{}^{3333\xi\eta\phi\nu}$	$2\overset{(\zeta)}{J}{}^{333\xi\phi\nu}$	$2\overset{(\zeta)}{J}{}^{333\xi\eta\phi\nu}$	$\overset{(\zeta)}{J}{}^{33\xi\eta\phi\nu}\}$
$\bar{N}^{3\zeta}=\{$	$\overset{(\zeta)}{J}{}^{3\zeta 33}$	$\overset{(\zeta)}{J}{}^{3\zeta 33\xi}$	$\overset{(\zeta)}{J}{}^{3\zeta 33\xi\eta}$	$2\overset{(\zeta)}{J}{}^{3\zeta 3\xi}$	$2\overset{(\zeta)}{J}{}^{3\zeta 3\xi\eta}$	$\overset{(\zeta)}{J}{}^{3\zeta\xi\eta}\}$
$\bar{M}^{\phi\zeta}=\{$	$\overset{(\zeta)}{J}{}^{3\zeta 33\phi}$	$\overset{(\zeta)}{J}{}^{3\zeta 33\xi\phi}$	$\overset{(\zeta)}{J}{}^{3\zeta 33\xi\eta\phi}$	$2\overset{(\zeta)}{J}{}^{3\zeta 3\xi\phi}$	$2\overset{(\zeta)}{J}{}^{3\zeta 3\xi\eta\phi}$	$\overset{(\zeta)}{J}{}^{3\zeta\xi\eta\phi}\}$
$\bar{N}^{\nu\phi}=\sum_{\zeta=1}^{n}\{$	$\overset{(\zeta)}{J}{}^{\nu\phi 33}$	$\overset{(\zeta)}{J}{}^{\nu\phi 33\xi}$	$\overset{(\zeta)}{J}{}^{\nu\phi 33\xi\eta}$	$2\overset{(\zeta)}{J}{}^{\nu\phi 3\xi}$	$2\overset{(\zeta)}{J}{}^{\nu\phi 3\xi\eta}$	$\overset{(\zeta)}{J}{}^{\nu\phi\xi\eta}\}$

(for ζ real elements)

7. SIMPLIFIED NONLINEAR THEORIES

The derived nonlinear governing equations for spatially curved beams of thin-walled open cross sections are summarized as follows: the strain-displacement relations (4.3) for strain measures $\overset{(1)}{E}_{33}$, $\overset{(1)}{E}_{33\xi}$, $\overset{(1)}{E}_{33\xi\eta}$, $\overset{(2)}{E}_{3\xi}$, $\overset{(2)}{E}_{3\xi\eta}$ and $\overset{(3)}{E}_{\xi\eta}$, the equations of motion (5.15) and (5.16) for displacement components U_i and $\Omega_{\xi i}$, the constitutive equations Table 1 for stress resultants and stress couples N^{33}, $\bar{M}^{\phi 3}$, $\bar{B}^{\phi\nu}$, $\bar{N}^{3\xi}$, $\bar{M}^{\phi\zeta}$ and $\bar{N}^{\zeta\phi}$, the boundary conditions (5.17) and (5.18).

The purpose of the present section is to discuss the usual allowable classical hypotheses of rods by means of the present analytical model and to present the approximations of the derived governing equations by means of these constraints.

For classical constraints, we can hold the following assumptions about the present model:

(1) The transverse normal strains for each element are ignored, i.e.

$$\overset{(3)}{E}_{\xi\eta} = 0 \quad (\text{for } \xi = \eta). \tag{7.1}$$

(2) The in-plane shear deformations between elements are ignored, i.e.

$$\overset{(3)}{E}_{\xi\eta} = 0 \quad (\text{for } \xi \neq \eta). \tag{7.2}$$

(3) The perpendicularity of each element is conserved, namely, the transverse shear deformations are ignored, i.e.

$$\overset{(2)}{E}_{3\xi} = 0. \tag{7.3}$$

(4) Warping in each element is ignored, i.e.

$$\Omega_{\xi 3} = 0. \tag{7.4}$$

Among these constraints, combining assumptions (1) and (2) implies that there is no change of cross sectional shape, namely, that there is an absence of local deformation, and it is considered to be the most universal hypothesis of rods. But although thin-walled open cross sections produce local deformations unlike solid sections, it is necessary to present a more accurate theory of rods involving local deformations.

The assumption based on a combination of (1)–(4) is the Bernoulli–Euler hypothesis which is used in the elementary beam theory. A hypothesis which includes all but (4) of the Bernoulli–Euler hypothesis is used in the Vlasov theory. The Timoshenko beam theory employs the mean value for the transverse shear deformation instead of excluding (3) alone from the above constraints, but only the theory except (3) is more exact than the Timoshenko beam theory because it has a lot of freedom in the transverse shear deformation.

Meanwhile, although the thin-wall of the body has been already employed in the formulation, we may hold the thinness assumption defined as follows:

(5) The size of the cross section is smaller as compared to the radii of curvature and torsion of the axial curve, i.e.

$$x^{\alpha}/R \ll 1 \text{ or } x^{\alpha}\Phi_i \ll 1. \tag{7.5}$$

This assumption can be used independent of the above-mentioned classical constraints. From (7.5) we can be approximate as follows:

$$M_c^{\ k} = \delta_c^{\ k},\ M = 1, \tag{7.6}$$

and the governing equations can be simplified as follows:

7.1 *Approximation* 1

Let us try to present the approximate equations under the thinness assumption (7.5).

(1) *Strain-displacement relations.* The underlined terms of (4.3) are negligible.

(2) *Equations of motion and boundary conditions.* The equations of motion and the mechanical boundary conditions are negligible in the underlined terms of (5.15)–(5.18).

(3) *Constitutive equations.* It follows from (7.6) that

$$\mathbf{T}_3 = \mathbf{A}_3,\ T^{ac} = \delta^{ac} \tag{7.7}$$

and

$$C^{abcd} = G\left[\delta^{ac}\delta^{bd} + \delta^{ad}\delta^{bc} + \frac{\lambda}{G}\delta^{ab}\delta^{cd}\right] \tag{7.8}$$

Hence, the Kirchhoff stress tensors s^{33}, $s^{3\xi}$ and $s^{\xi\eta}$ are reduced to

$$\begin{aligned} s^{33} &= (2G+\lambda)E_{33} + \lambda\delta^{\xi\eta}E_{\xi\eta} \\ s^{3\xi} &= 2G\delta^{\xi\eta}E_{3\eta} \\ s^{\xi\eta} &= \lambda\delta^{\xi\eta}E_{33} + (2G\delta^{\xi\phi}\delta^{\eta\zeta} + \lambda\delta^{\xi\eta}\delta^{\zeta\phi})E_{\zeta\phi}. \end{aligned} \tag{7.9}$$

Employing the above stress–strain relations into (5.7), we may obtain the constitutive equations of simplified Table 1. But, in view of the practical use, it is necessary to present further simpler constitutive equations than the equations given by the above-mentioned method. Therefore we can use the following engineering stress–strain relations which are accurate enough for practical usage:

$$\begin{aligned} s^{33} &= E\,E_{33} \\ s^{3\xi} &= 2G\,E_{3\xi} \\ s^{\xi\eta} &= 2G\,E_{\xi\eta}. \end{aligned} \tag{7.10}$$

The simplified expression for $s^{\xi\eta}$ in the above equations is obtained by assuming that the Poisson's ratio is zero. The reduced simplified constitutive equations are given in

$$N^{33} = E[A\overset{(1)}{E}_{33} + I^{\xi}\overset{(1)}{E}_{33\xi} + I^{\xi\eta}\overset{(1)}{E}_{33\xi\eta}]$$

$$\bar{M}^{\phi 3} = E[I^{\phi}\overset{(1)}{E}_{33} + I^{\xi\phi}\overset{(1)}{E}_{33\xi} + I^{\xi\eta\phi}\overset{(1)}{E}_{33\xi\eta}]$$

$$\bar{B}^{\phi\nu} = E[I^{\phi\nu}\overset{(1)}{E}_{33} + I^{\xi\phi\nu}\overset{(1)}{E}_{33\xi} + I^{\xi\eta\phi\nu}\overset{(1)}{E}_{33\xi\eta}]$$

$$\underline{\underline{\bar{N}^{\upsilon\phi} = 2GA\overset{(3)}{E}_{\upsilon\phi}}} \tag{7.11}$$

$$\bar{N}^{3\zeta} = 2G[\overset{(\zeta)}{A}\overset{(2)}{E}_{3\zeta} + \overset{(\zeta)}{I}{}^{\eta}\overset{(2)}{E}_{3\zeta\eta}]$$

(no sum on ζ and for ζ real elements)

$$\bar{M}^{\phi\zeta} = 2G[\overset{(\zeta)}{I}{}^{\phi}\overset{(2)}{E}_{3\zeta} + \overset{(\zeta)}{I}{}^{\eta\phi}\overset{(2)}{E}_{3\zeta\eta}],$$

where the constants are defined as follows:

$$\begin{Bmatrix} \overset{(\zeta)}{A} \\ \overset{(\zeta)}{I}{}^{\xi} \\ \overset{(\zeta)}{I}{}^{\xi\eta} \\ \overset{(\zeta)}{I}{}^{\xi\eta\phi} \\ \overset{(\zeta)}{I}{}^{\xi\eta\phi\nu} \end{Bmatrix} = \int_{(\zeta)} \begin{Bmatrix} 1 \\ y^{\xi} \\ y^{\xi}y^{\eta} \\ y^{\xi}y^{\eta}y^{\phi} \\ y^{\xi}y^{\eta}y^{\phi}y^{\nu} \end{Bmatrix} dS^{(\zeta)} \text{ and } \begin{Bmatrix} A \\ I^{\xi} \\ I^{\xi\eta} \\ I^{\xi\eta\phi} \\ I^{\xi\eta\phi\nu} \end{Bmatrix} = \sum_{\zeta=1}^{n} \begin{Bmatrix} \overset{(\zeta)}{A} \\ \overset{(\zeta)}{I}{}^{\xi} \\ \overset{(\zeta)}{I}{}^{\xi\eta} \\ \overset{(\zeta)}{I}{}^{\xi\eta\phi} \\ \overset{(\zeta)}{I}{}^{\xi\eta\phi\nu} \end{Bmatrix} \tag{7.12}$$

7.2 *Approximation* 2

In the preceding clause the simplified forms for the nonlinear theory with local deformations have been represented by means of the thinness assumption. In order to obtain the further simplified governing equations, we suppose that local deformations are negligible, i.e. the cross section does not change its shape, in addition to the thinness assumption. This assumption may be expressed by (7.1) and (7.2). Hence it follows that the displacement components $\Omega_{\xi i}$ must satisfy the following expression:

$$C_{\xi}{}^{\alpha}\Omega_{\eta\alpha} + C_{\eta}{}^{\alpha}\Omega_{\xi\alpha} + \Omega_{\xi i}\Omega_{\eta}{}^{i} = 0 \quad (\text{for } \xi = \eta \text{ and } \xi \neq \eta), \tag{7.13}$$

and that the stress resultants $N^{\xi\eta}$ corresponding to the strain measures $\overset{(3)}{E}_{\xi\eta}$ may be put as

$$N^{\xi\eta} = 0. \tag{7.14}$$

Hence, the set of governing equations stated in Section 7.1 can be simplified in the expressions of omitted terms involving the strains $\overset{(3)}{E}_{\xi\eta}$ and stresses $\bar{N}^{\xi\eta}$, which are indicated as doubly-underlined terms.

8. LINEAR THEORY

Although the linear theory can be easily presented from linearizing the nonlinear governing equations, the present Chapter states the linear theory corresponding to the simplified nonlinear theories.

8.1 *Linear theory* 1

The linear theory under the thinness assumption can be obtained from Section 7.1 as follows:

(1) ***Strain-displacement relations.*** It follows from (4.3) that

$$\overset{(1)}{E}_{33} = U_{3\|3}, \qquad \overset{(1)}{E}_{33\xi} = \bar{\Omega}_{\xi 3\|3}, \tag{8.1}$$

$$\overset{(2)}{E}_{3\xi} = \tfrac{1}{2}[\Omega_{\xi 3} + U_{\alpha\|3}C_{\xi}{}^{\alpha}], \qquad \overset{(2)}{E}_{3\xi\eta} = \tfrac{1}{2}\Omega_{\eta\alpha\|3}C_{\xi}{}^{\alpha}, \tag{8.2}$$

$$\underline{\overset{(3)}{E}_{\xi\eta} = \tfrac{1}{2}[C_{\xi}{}^{\alpha}\Omega_{\eta\alpha} + C_{\eta}{}^{\alpha}\Omega_{\xi\alpha}].} \tag{8.3}$$

The strain distributions are reduced to

$$\begin{aligned} E_{33} &= \overset{(1)}{E}_{33} + y^{\xi}\overset{(1)}{E}_{33\xi} \\ E_{3\xi} &= \overset{(2)}{E}_{3\xi} + y^{\eta}\overset{(2)}{E}_{3\xi\eta} \\ E_{\xi\eta} &= \overset{(3)}{E}_{\xi\eta}. \end{aligned} \tag{8.4}$$

Since it is sufficient to consider only the stress resultants and stress couples corresponding to the strain measures given in (8.1)–(8.3), the stress couples of high order, $\bar{B}^{\xi\eta}$, can be ignored.

(2) *Equations of motion, boundary conditions, and constitutive equations.* From (5.15) to (5.18), the equations of motion become

$$\delta U_i : [N^{33}\delta_3{}^i + \bar{N}^{3\xi}C_{\xi}{}^i]_{\|3} + p^i = c^i \tag{8.5}$$

$$\delta\Omega_{\xi i} : [\bar{M}^{\xi 3}\delta_3{}^i + \bar{M}^{\xi\eta}C_{\eta}{}^i + \delta^{ij}\delta_{\phi}{}^{\xi}C_{\phi}{}^{\lambda}T^{\phi}e_{\lambda j}]_{\|3} - \bar{N}^{3\xi}\delta_3{}^i - \underline{\bar{N}^{\xi\eta}C_{\eta}{}^i} + \bar{m}^{\xi i} = \bar{b}^{\xi i} \tag{8.6}$$

and the boundary conditions are

$$\overset{*}{N}{}^i = N^{33}\delta_3{}^i + \bar{N}^{3\xi}C_{\xi}{}^i \quad \text{or} \quad \overset{*}{U}_i = U_i \tag{8.7}$$

$$\overset{*}{\bar{M}}{}^{\xi i} = \bar{M}^{\xi 3}\delta_3{}^i + \bar{M}^{\xi\eta}C_{\eta}{}^i + \delta^{ij}\delta_{\phi}{}^{\xi}C_{\phi}{}^{\lambda}T^{\phi}e_{\lambda j} \quad \text{or} \quad \overset{*}{\Omega}_{\xi i} = \Omega_{\xi i}. \tag{8.8}$$

The constitutive equations are given from (7.11) as follows:

$$\begin{aligned} N^{33} &= E[A\overset{(1)}{E}_{33} + I^{\xi}\overset{(1)}{E}_{33\xi}] \\ \bar{M}^{\phi 3} &= E[I^{\phi}\overset{(1)}{E}_{33} + I^{\xi\phi}\overset{(1)}{E}_{33\xi}] \\ \underline{\bar{N}^{\upsilon\phi} &= 2GA\overset{(3)}{E}_{\upsilon\phi}} \\ \bar{N}^{3\zeta} &= 2G[\overset{(\zeta)}{A}\overset{(2)}{E}_{3\zeta} + \overset{(\zeta)}{I}{}^{\eta}\overset{(2)}{E}_{3\zeta\eta}] \\ &\qquad\qquad \text{(no sum on } \zeta \text{ and for } \zeta \text{ real elements)} \\ \bar{M}^{\phi\zeta} &= 2G[\overset{(\zeta)}{I}{}^{\phi}\overset{(2)}{E}_{3\zeta} + \overset{(\zeta)}{I}{}^{\eta\phi}\overset{(2)}{E}_{3\zeta\eta}]. \end{aligned} \tag{8.9}$$

8.2 *Linear theory* 2

Ignoring local deformations in addition to the thinness assumption, we can obtain the linear theory corresponding to the nonlinear theory given in Section 7.2. The derived linear theory corresponds to the well-known classical theory.

It follows that, if we ignore local deformations, the displacement components $\Omega_{\xi i}$ must satisfy the following constraints:

$$C_{\xi}{}^{\alpha}\Omega_{\eta\alpha} + C_{\eta}{}^{\alpha}\Omega_{\xi\alpha} = 0 \quad (\text{for } \xi = \eta \text{ and } \xi \neq \eta). \tag{8.10}$$

Hence, the governing equations for the present linear theory may be expressed in the forms of the omitted underlined terms in the preceding results.

9. EXAMPLES

In order to examine the derived theory, the problems in the twisting of straight cantilevers with a doubly symmetric H section and with a channel section, which are composed of an elastic and isotropic material without initial imperfections in Sections 9.1 and 9.2, respectively, are solved by the linear theory without local deformations derived in Section 8.2. Further in Section 9.3 we state the numerical example of the derived nonlinear theory on the elastic beam under uniform bending. These examples are a useful means of showing the reliability of a given model.

9.1 *Torsion of a doubly symmetric H section*

The cantilever is subjected to twisting moment, $\overset{*}{M}_3$, on the axial point at $x^3 = l$, as shown in Fig. 4, and its warping is restricted on the fixed end at $x^3 = 0$. In the constraint of warping at $x^3 = l$, case 1 restricts warping while case 2 allows it. Since there is the problem of torsion, we may consider $\Omega_{\xi i}$ only for displacement components and the needed boundary conditions become

$$\begin{aligned} &\overset{*}{M}_3 = M_3 && \text{at} \quad x^3 = l \\ &\Omega_{\xi i} = 0 && \text{at} \quad x^3 = l \\ &\Omega_{\xi i} = 0 && \text{at} \quad x^3 = l \quad \text{for case 1} \\ &\bar{M}^{13} = 0 && \text{at} \quad x^3 = l \quad \text{for case 2.} \end{aligned} \tag{9.1}$$

For straight beams without initial imperfections, the covariant derivatives are reduced to the partial derivatives.

(1) *Coordinate systems and base vectors.* Choosing the axial coordinate axes x^i to be the principal centroidal axes, as shown in Fig. 4, the auxiliary element "0" becomes unnecessary. The base vectors $\mathbf{T}_1$, $\mathbf{T}_2$ and $\mathbf{T}_3$ and local coordinates y^1, y^2 and y^3 for each element are shown in Fig. 5. The values of y^ξ are given in Fig. 6.

(2) *Rotation tensors* $C_\xi{}^\alpha$.

$$\begin{aligned} &\text{element 1} \quad \theta^1 = 270° && C_1{}^\alpha = (C^{-1})_\alpha{}^1 = -\delta_2{}^\alpha \\ &\text{element 2} \quad \theta^2 = 0° && C_2{}^\alpha (C^{-1})_\alpha{}^2 = \delta_1{}^\alpha \\ &\text{element 3} \quad \theta^3 = 90° && C_3{}^\alpha = (C^{-1})_\alpha{}^3 = \delta_2{}^\alpha \end{aligned} \tag{9.2}$$

(3) *Constraints by ignoring local deformations.* Based on the neglect of local deformations, the displacements $\Omega_{\xi\alpha}$ must satisfy (8.10) as follows:

$$\overset{(3)}{E}_{11} = \overset{(3)}{E}_{12} = \overset{(3)}{E}_{13} = \overset{(3)}{E}_{22} = \overset{(3)}{E}_{23} = \overset{(3)}{E}_{33} = 0. \tag{9.3}$$

Solving (9.3) under (9.2), the torsion of the cross section is, as is well-known, expressed by the angle of torsion, Ω_{22}, only. Therefore

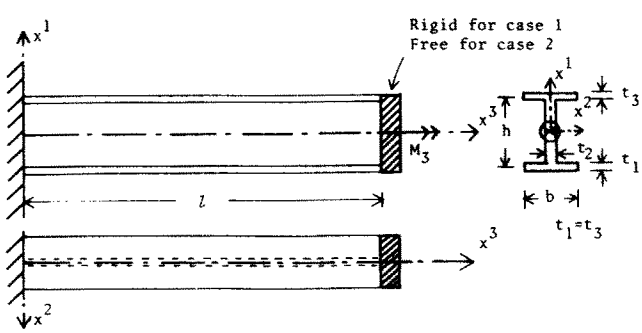

Fig. 4. The twisting of a cantilever beam.

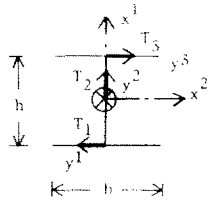

Fig. 5. Local base vectors $\mathbf{T}_\xi$ and local coordinates y^ξ.

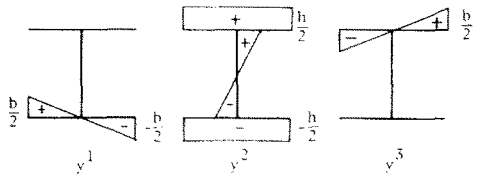

Fig. 6. The values of local coordinates y^ξ.

$$\Omega_{\xi i} = \begin{bmatrix} \Omega_{22} & 0 & \Omega_{13} \\ 0 & \Omega_{22} & \Omega_{23} \\ -\Omega_{22} & 0 & \Omega_{33} \end{bmatrix}. \tag{9.4}$$

(4) *Strain-displacement relations.* It follows from (8.1) and (8.2) that

$$\overset{(1)}{E}_{33\xi} = \Omega_{\xi 3,3} \qquad \overset{(2)}{E}_{3\xi} = \tfrac{1}{2}\Omega_{\xi 3}$$

$$\overset{(2)}{E}_{31\eta} = \tfrac{1}{2}\Omega_{\eta 2,3} \quad \overset{(2)}{E}_{32\eta} = \tfrac{1}{2}\Omega_{\eta 1,3} \quad \overset{(2)}{E}_{33\eta} = \tfrac{1}{2}\Omega_{\eta 2,3}. \tag{9.5}$$

(5) *Equilibrium equations for warping* $\Omega_{\xi 3}$. From (8.6), we hold that

$$\delta\Omega_{\xi 3}: \quad \bar{M}^{\xi 3}{}_{,3} - \bar{N}^{3\xi} = 0. \quad (\xi = 1, 2, 3). \tag{9.6}$$

(6) *Constitutive equations.* From the simplified expression of (8.9), we have

$$\begin{aligned} \bar{M}^{\xi 3} &= E\overset{(\xi)}{I}{}^{\xi\xi}\Omega_{\xi 3,3} \quad (\xi = 1, 3) \\ \bar{M}^{23} &= E\left(\frac{h^2}{4}\overset{(1)}{A} + \overset{(2)}{I}{}^{22} + \frac{h^2}{4}\overset{(3)}{A}\right)\Omega_{23,3} \\ \bar{N}^{3\xi} &= G\overset{(\xi)}{A}\left(\Omega_{\xi 3} + \frac{h}{2}\Omega_{22,3}\right) \quad (\xi = 1, 3) \\ \bar{N}^{32} &= G\overset{(2)}{A}\Omega_{23}. \end{aligned} \tag{9.7}$$

(7) *Relations between* Ω_{22} *and* $\Omega_{\xi 3}$. The substitution of (9.7) into (9.6) is

$$E\overset{(1)}{I}{}^{11}\Omega_{13,33} - G\overset{(1)}{A}\left[\Omega_{13} + \frac{h}{2}\Omega_{22,3}\right] = 0 \tag{9.8}$$

$$E\left[\frac{h^2}{4}\overset{(1)}{A} + \frac{h^2}{4}\overset{(3)}{A} + \overset{(2)}{I}{}^{22}\right]\Omega_{23,33} - G\overset{(2)}{A}\Omega_{23} = 0 \tag{9.9}$$

$$E\overset{(3)}{I}{}^{33}\Omega_{33,33} - G\overset{(3)}{A}\left[\Omega_{33} + \frac{h}{2}\Omega_{22,3}\right] = 0. \tag{9.10}$$

Since the coefficients of the differential equations (9.8) and (9.10) have the same values for $t_1 = t_3$, it can be concluded that

$$\Omega_{13} = \Omega_{33}. \tag{9.11}$$

Hence, $\Omega_{22,3}$ is obtained from (9.8) as

$$\Omega_{22,3} = \frac{2}{h}\left[\frac{E\overset{(1)}{I}{}^{11}}{G\overset{(1)}{A}}\Omega_{13,33} - \Omega_{13}\right]. \tag{9.12}$$

Meanwhile, the differential equation (9.9) for Ω_{23} becomes

$$\Omega_{23} = 0 \tag{9.13}$$

under the present boundary conditions.

(8) *Equilibrium equation for warping.* Using (5.25), the boundary condition for the torsional moment M_3 is

$$M_3 = -\bar{M}^{21} + \bar{M}^{23} + \bar{M}^{12} - \bar{M}^{32} + T. \tag{9.14}$$

From the constitutive equations the torsional moments due to warping may be written as

$$\bar{M}^{21} = -\bar{M}^{23} = -\frac{G\overset{(1)}{A}h}{2}\left[\Omega_{13} + \frac{h}{2}\Omega_{22,3}\right] \quad \text{(All others are zero).} \tag{9.15}$$

Meanwhile, the St. Venant torsional moment T is given by

$$T = GJ\Omega_{22,3}. \tag{9.16}$$

The above equation is also obtained by substituting the expression linearized (5.4) for the angle of rotation, ω_ξ, of element ξ into (5.23). Hence, employing (9.15) and (9.16) into (9.14), the torsional moment M_3 is reduced to

$$M_3 = G\overset{(1)}{A}h\Omega_{13} + G\left[\frac{\overset{(1)}{A}h^2}{2} + J\right]\Omega_{22,3}. \tag{9.17}$$

Using (9.12) into (9.17), the equilibrium equation for warping becomes

$$\Omega_{13,33} - p^2\Omega_{13} = \frac{M_3}{GJ}\frac{h}{2}p^2 \tag{9.18}$$

with

$$p^2 = \frac{GJ}{EC_\omega}, \tag{9.19}$$

where C_ω is defined as

$$C_\omega = \frac{\overset{(1)}{I}{}^{11}}{\overset{(1)}{A}}\left(\frac{h^2}{2}\overset{(1)}{A} + J\right) = \frac{t_1 b^3 h^2}{24} + \underline{\frac{b^2 J}{12}}. \tag{9.20}$$

For usual structural members, since the underlined term in (9.20) is smaller in comparison than the first term, we can usually neglect the second term and the reduced result agrees with the well-known warping torsion stiffness constant.

(9) *Solutions of the warping parameter, Ω_{13}, and the angle of torsion, Ω_{22}.* The general solution of Ω_{13} may be given in

$$\Omega_{13} = \frac{M_3}{GJ}\frac{h}{2}[C_1 \cosh px^3 + C_2 \sinh px^3 - 1] \tag{9.21}$$

from (9.18), and the angle of twist per unit length, $\Omega_{22,3}$, yields

$$\Omega_{22,3} = \frac{M_3}{GJ}\left[C_1\left(\underline{\frac{b^2J}{12C_\omega}} - 1\right)\cosh px^3 + C_2\left(\underline{\frac{b^2J}{12C_\omega}} - 1\right)\sinh px^3 + 1\right] \tag{9.22}$$

by substituting (9.21) into (9.12). For usual members, since the underlined terms in the above equation are negligible when compared to unit, we can approximate (9.22) as follows:

$$\Omega_{22,3} \simeq -\frac{M_3}{GJ}[C_1 \cosh px^3 + C_2 \sinh px^3 - 1]. \tag{9.23}$$

Therefore, the warping parameter is expressed approximately as

$$\Omega_{13} \simeq -\frac{h}{2}\Omega_{22,3} \tag{9.24}$$

from (9.21) and (9.23). Namely, it implies that the parameter Ω_{13} referred to the local coordinates selected as shown in Fig. 5 takes the negative value. From (9.13) and (9.24), warping at $y^1 = b/2$ in the bottom flange takes the value

$$\Omega_{13}\frac{b}{2} = -\frac{bh}{4}\Omega_{22,3} \quad \text{at} \quad y^1 = \frac{b}{2}. \tag{9.25}$$

As compared to the Vlasov theory, (9.23) and (9.25) agree with the equations for torsion and warping, respectively, when the St. Venant warping function φ_s is given as shown in Fig. 7.

(10) *Stresses.* The normal stress s^{33} is given in

$$s^{33} = EE_{33} = Ey^{\xi}\overset{(1)}{E}_{33\xi}. \tag{9.26}$$

Explicitly,

$$\begin{aligned} s^{33} &= Ey^1\Omega_{13,3} && \text{for top flange} \\ s^{33} &= 0 && \text{for web} \\ s^{33} &= Ey^3\Omega_{33,3} = Ey^3\Omega_{13,3} && \text{for bottom flange.} \end{aligned} \tag{9.27}$$

Similarly, the shearing stresses $s^{3\xi}$ due to warping take the form

$$\begin{aligned} s^{31} &= G\left[\Omega_{13} + \frac{h}{2}\Omega_{22,3}\right] && \text{for top flange} \\ s^{32} &= 0 && \text{for web} \\ s^{33} &= G\left[\Omega_{33} + \frac{h}{2}\Omega_{22,3}\right] && \text{for bottom flange} \end{aligned} \tag{9.28}$$

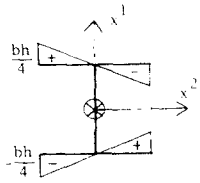

Fig. 7. St. Venant warping function.

from (9.7). Using (9.8), the above equation may be rewritten as

$$s^{31} = s^{33} = \frac{E\overset{(1)}{I}{}^{11}}{\overset{(1)}{A}}\Omega_{13,33} \simeq -\frac{E\overset{(1)}{I}{}^{11}h}{2\overset{(1)}{A}}\Omega_{22,333}, \tag{9.29}$$

wherein the distribution of shearing stress s^{31} is expressed as

$$s^{31}{}_{max} = \kappa s^{31} = 1.5\, s^{31} \tag{9.30}$$

by means of the well-known coefficient κ. At the end points it takes $s^{31} = 0$. The total shearing stress can be obtained as the sum of the shearing stress due to the St. Venant's torsion and (9.28) or (9.29).

9.2 *Torsion of a channel section*

Let us consider twisting of a cantilever with a channel section, as shown in Fig. 8, under the boundary condition which is common with H section.

(1) *Coordinate systems and base vectors.* Since the axial coordinate system x^i is chosen on a straight line which is not in the cross section, as shown in Fig. 9, the local coordinate system requires an auxiliary element 0. It is shown that the local coordinate axes y^ξ and its values are given in Fig. 9 and Fig. 10, respectively.

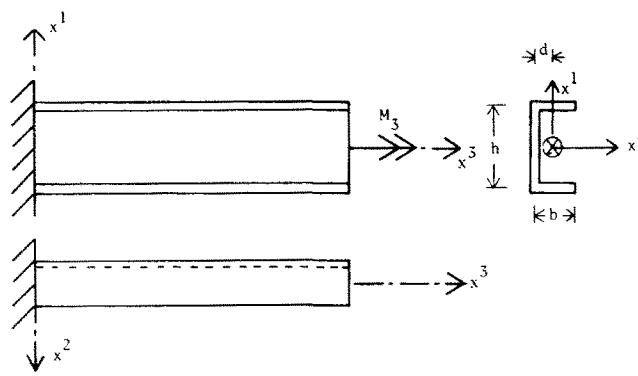

Fig. 8. The twisting of a cantilever beam.

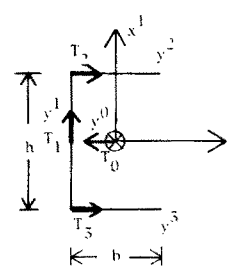

Fig. 9. Local base vectors $\mathbf{T}_\xi$ and local coordinates y^ξ.

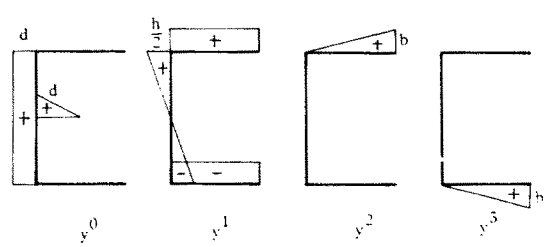

Fig. 10. The values of local coordinates y^ξ.

(2) *Rotation tensors* C_ξ^α.

$$\begin{array}{ll} \text{element } 0 & \theta^0 = 270^\circ \\ \text{element } 1 & \theta^1 = 0^\circ \\ \text{element } 2 & \theta^2 = 90^\circ \\ \text{element } 3 & \theta^3 = 90^\circ \end{array} \quad C_\xi^\alpha = \begin{bmatrix} 0 & -1 \\ 1 & 0 \\ 0 & 1 \\ 0 & 1 \end{bmatrix} \quad (\xi = 0, 1, 2, 3.) \tag{9.31}$$

(3) *Constraints from the absence of local deformations.* Substituting (8.3) into the following constraints

$$\overset{(3)}{E}_{00} = \overset{(3)}{E}_{11} = \overset{(3)}{E}_{22} = \overset{(3)}{E}_{33} = \overset{(3)}{E}_{01} = \overset{(3)}{E}_{12} = \overset{(3)}{E}_{13} = 0 \tag{9.32}$$

gives

$$\Omega_{\xi i} = \begin{bmatrix} \Omega_{01} & 0 & \Omega_{03} \\ 0 & \Omega_{01} & \Omega_{13} \\ -\Omega_{01} & 0 & \Omega_{23} \\ -\Omega_{01} & 0 & \Omega_{33} \end{bmatrix}. \tag{9.33}$$

(4) *Strain-displacement relations.* It follows that

$$\overset{(1)}{E}_{33\xi} = \Omega_{\xi 3,3}, \quad \overset{(2)}{E}_{3\xi} = \tfrac{1}{2}\Omega_{\xi 3}, \quad \overset{(3)}{E}_{3\xi\lambda} = \tfrac{1}{2}\Omega_{\eta\alpha,3}C_\xi^\alpha. \tag{9.34}$$

(5) *Constitutive equations.*

$$\begin{aligned} \bar{N}^{31} &= G\overset{(1)}{A}[\Omega_{13} + d\Omega_{01,3}] \\ \bar{N}^{32} &= G\overset{(2)}{A}\left[\Omega_{23} + \frac{h}{2}\Omega_{01,3}\right] \\ \bar{N}^{33} &= G\overset{(3)}{A}\left[\Omega_{33} - \frac{h}{2}\Omega_{01,3}\right] \\ \bar{M}^{03} &= E\overset{(1)}{A}\, d^2\Omega_{03,3} \\ \bar{M}^{13} &= E\left[I\Omega_{13,3} + \frac{bh}{4}\overset{(2)}{A}\Omega_{23,3} - \frac{bh}{4}\overset{(3)}{A}\Omega_{33,3}\right] \\ \bar{M}^{23} &= E\left[\frac{bh}{4}\overset{(2)}{A}\Omega_{13,3} + \frac{b^2}{3}\overset{(2)}{A}\Omega_{23,3}\right] \\ \bar{M}^{33} &= E\left[-\frac{bh}{4}\overset{(3)}{A}\Omega_{13,3} + \frac{b^2}{3}\overset{(2)}{A}\Omega_{33,3}\right] \end{aligned} \tag{9.35}$$

where

$$I = \frac{h^2}{12}\overset{(1)}{A} + \frac{h^2}{4}(\overset{(2)}{A} + \overset{(3)}{A}). \tag{9.36}$$

(6) *Equilibrium equations for warping* $\Omega_{\xi 3}$.

$$\begin{array}{ll} \delta\Omega_{03}: & \bar{M}^{03}{}_{,3} = 0 \\ \delta\Omega_{\xi 3}: & \bar{M}^{\xi 3}{}_{,3} - \bar{N}^{3\xi} = 0 \quad (\xi = 1, 2, 3). \end{array} \tag{9.37}$$

Substituting (9.35) into (9.37) and noticing that $\overset{(2)}{A} = \overset{(3)}{A}$ is, we obtain

$$\Omega_{33} = -\Omega_{23}. \tag{9.38}$$

Therefore, the equilibrium equations (9.37) are reduced to

$$\Omega_{03,33} = 0 \tag{9.39}$$

$$E\left(I\Omega_{13,33} + \frac{bh}{2}\overset{(2)}{A}\Omega_{23,33}\right) - G\overset{(1)}{A}(\Omega_{13} + d\Omega_{01,3}) = 0 \tag{9.40}$$

$$E\left(\frac{bh}{4}\Omega_{13,33} + \frac{b^2}{3}\Omega_{23,33}\right) - G\left(\Omega_{23} + \frac{h}{2}\Omega_{01,3}\right) = 0. \tag{9.41}$$

Solving (9.39) under the boundary condition (9.1) is

$$\Omega_{03} = 0. \tag{9.42}$$

(7) *An equation for torsional moment.* From (9.1) and (5.26), the torsional moment M_3 is obtained by

$$M_3 = \bar{M}^{01} - \bar{M}^{31} + \bar{M}^{12} + \bar{M}^{13} + T. \tag{9.43}$$

Employing the following torsional moments due to warping

$$\bar{M}^{01} = G\overset{(1)}{A}d[\Omega_{13} + d\Omega_{01,3}]$$

$$\bar{M}^{12} = \bar{M}^{13} = G\overset{(2)}{A}\frac{h}{2}\left[\Omega_{23} + \frac{h}{2}\Omega_{01,3}\right] \tag{9.44}$$

and the St. Venant torsional moment

$$T = GJ\Omega_{01,3} \tag{9.45}$$

into the above equation yields

$$M_3 = G\left[d\overset{(1)}{A}(\Omega_{13} + d\Omega_{01,3}) + h\overset{(2)}{A}\left(\Omega_{23} + \frac{h}{2}\Omega_{01,3}\right)\right] + GJ\Omega_{01,3}. \tag{9.46}$$

(8) *Solutions of warping parameters,* Ω_{13} *and* Ω_{23}, *and the angle of torsion,* Ω_{01}. The unknowns, Ω_{13}, Ω_{23} and Ω_{01}, are given by solving (9.40), (9.41) and (9.46), but it is impossible to solve these easily because of the coupled forms in the equations.

Then, in order to convert these field equations into uncoupled forms, let us suppose that the distance, d, is a constant value satisfying the following expression:

$$\Omega_{13} + d\Omega_{01,3} = 0. \tag{9.47}$$

Employing (9.47) into (9.40), we have

$$\Omega_{13,33} = -\frac{bh}{2I}\overset{(2)}{A}\Omega_{23,33}. \tag{9.48}$$

Substituting the above equation into (9.41) gives

$$\Omega_{01,3} = \frac{2}{h}\left[\left(\frac{1}{3} - \frac{h^2\overset{(2)}{A}}{8I}\right)b^2\frac{E}{G}\Omega_{23,33} - \Omega_{23}\right]. \tag{9.49}$$

Therefore, using (9.49) in (9.46), the equation for Ω_{23} is reduced to

$$\Omega_{23,33} - p^2\Omega_{23} = \frac{M_3}{Ga} \tag{9.50}$$

with

$$p^2 = \frac{G}{E} \frac{J}{b^2\left(\frac{b^2\overset{(2)}{A}}{2} + J\right)\left(\frac{1}{3} - \frac{b^2\overset{(2)}{A}}{8I}\right)} \tag{9.51}$$

$$a = \frac{2J}{hp^2}. \tag{9.52}$$

The general solution of (9.50) is

$$\Omega_{23} = \frac{M_3}{GJ}\frac{h}{2}[C_1 \cosh px^3 + C_2 \sinh px^3 - 1]. \tag{9.53}$$

Hence, from (9.49) and (9.53), $\Omega_{01,3}$ is given as

$$\Omega_{01,3} = \frac{M_3}{GJ}[C_1C_3 \cosh px^3 + C_2C_3 \sinh px^3 + 1], \tag{9.54}$$

where C_3 is defined as

$$C_3 = -\frac{\frac{h^2}{2}\overset{(2)}{A}}{\left(\frac{h^2}{2}\overset{(2)}{A} + J\right)} \simeq -1 \quad \left(\text{since } \frac{h^2}{2}\overset{(2)}{A} \gg J\right). \tag{9.55}$$

Therefore,

$$\Omega_{01,3} \simeq \frac{M_3}{GJ}[-C_1 \cosh px^3 - C_2 \sinh px^3 + 1]. \tag{9.56}$$

By using (9.54) or (9.56) into (9.47), Ω_{13} is

$$\Omega_{13} \simeq \frac{M_3}{GJ} d[C_1 \cosh px^3 + C_2 \sinh px^3 - 1]. \tag{9.57}$$

Since Ω_{23}, $\Omega_{13,3}$ and Ω_{13} given here are presented under the constant distance, d, selected as satisfying (9.47) in order to uncouple the field equations, let us try to find such a "d". Based on the condition that the expression for $\Omega_{13,33}$ given from (9.48) must agree with the one from (9.57), we have

$$d = -\frac{b}{2I}\left(\frac{h^2}{2}\overset{(2)}{A} + J\right) \simeq -\frac{bh^2}{4I}\overset{(2)}{A} \quad \left(\text{since } \frac{h^2}{2}\overset{(2)}{A} \gg J\right). \tag{9.58}$$

The reduced expression agrees with the shear center. Hence it reconfirms that the shear center plays an effective part in uncoupling the torsional rotation and warping in the linear theory without local deformations.

9.3 *Uniform bending of a doubly symmetric H section*

For the numerical example of the derived nonlinear field equations, we show that the simple problem of an elastic beam consisting of a doubly symmetric uniform H section, with the initial imperfection, is subject to uniform bending at both end-moments. The numerical method employs the finite difference method, which divides the beam into 20 equal parts. Also it is assumed that the initial imperfection has a sinusoidal rotation about the centroidal axis x^3.

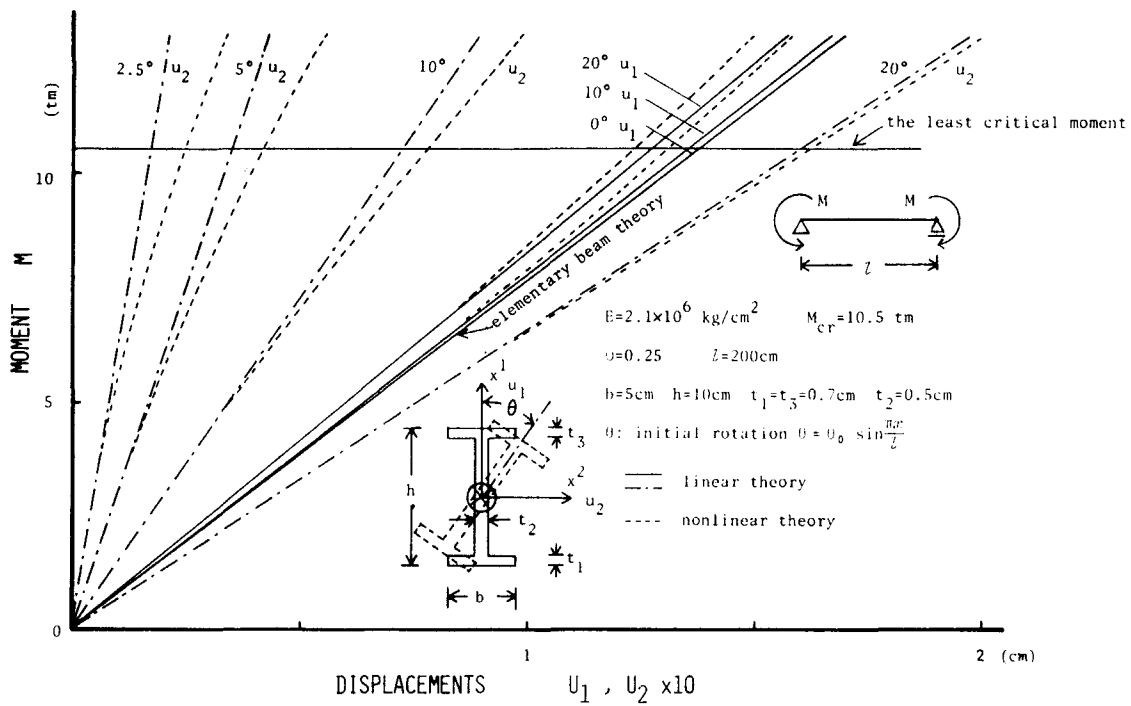

Fig. 11. Moment-displacement relations.

Hence

$$\theta_2 = \bar{\theta}_2 + \theta_0 \sin\frac{\pi x}{l} = \theta_0 \sin\frac{\pi x}{l} \quad (\bar{\theta}_2 = 0 \text{ in the present state}).$$

Figure 11 is the moment-displacement relations of the numerical results for both the further simplified nonlinear field equation without local deformations which was derived from Section 7.2 and the corresponding linear theory in Section 8.2. It follows that the vertical deflection, u_1, shows smaller nonlinearity in an elastic beam regardless of initial rotations but that, for the lateral displacement, u_2, the smaller the initial rotation is as compared with the perfect beam, the more nonlinearity the beam takes. For practical beams, however, the moment-displacement relations may show a tendency to soften in order to decrease the stiffness of the cross section because of plasticity.

The vertical deflection, u_1, at the midspan in the linear theory for the perfect beam agrees with the elementary beam theory and it follows that the elementary beam theory shows relatively good approximation for the vertical displacement of the linear and nonlinear elastic theories with comparatively small initial rotations. Also it is shown from the numerical results involving local deformations for the same problem that local deformations have negligible order in elastic beams as compared with the vertical and lateral displacements, because the stress exceeds the yield stress locally in local deformations.

10. CONCLUSIONS

A set of governing equations for the large displacement theory of spatially curved elastic beams of uniform thin-walled open cross sections consisting of straight rectangular elements has been presented explicitly in the Lagrangian form. In the present paper Epstein and Murray's analytical model has been extended so as to choose arbitrarily the axial curve of beams by the use of an auxiliary element when the axial curve is not located on the middle line of one of the straight rectangular elements. And it has been shown that Epstein and Murray's model can easily be extended to include local deformations, i.e. in-plane distortions of the cross section by getting rid of a certain number of constraints. Further, the simplified governing equations for the nonlinear and linear theories with and without local deformations have been derived from the governing equation by means of the thinness assumption. It has been shown, in order to illustrate the reliability of the proposed model, that the reduced linear theory without local deformations which is subject to the thinness assumption agrees with Vlasov's linear theory.

The general theory involving the local rotation for thin-walled open cross sections has been systematically formulated on the basis of the extended analytical model. Hence, by applying the present theory to problems such as the local buckling of beams and the torsional and torsional–flexural bucklings of columns and beam-columns, the behavior of local deformations should be clear.

Acknowledgements—The authors would like to express their gratitude to Dr. Tetsuya Matsui of Nagoya University for his valuable discussions and careful readings of the manuscript and to Mr. Francis Noji of Kanazawa Institute of Technology and Mrs. Jane Morrison Nakatani of Hokkoku Culture Center for their careful readings of the manuscript. The support of Nihon Kokan Inc. is also acknowledged.

REFERENCES

1. V. Z. Vlasov, *Thin-Walled Elastic Beams*, 2nd Edn. Israel program for Sci. Trans. (1961).
2. S. S. Antman and W. H. Warner, Dynamical theory of hyperelastic rods. *Arch. Rat. Mech. Anal.* **23**, 135 (1966).
3. E. S. Suhubi, On the foundations of the theory of rod. *Int. J. Engng Sci.* **6**, 169 (1968).
4. A. E. Green, P. M. Naghdi and M. L. Warner, On the theory of rods. *Proc. R. Soc. Lond.* **A337**, 451 (1974).
5. H. Takabatake, On the general theory of a curved and twisted rod (in Japanese). *Trans. A. I. J.* **256**, 15 (1977).
6. O. Matsuoka and T. Iijima, The general theory of rods with micro-deformations (in Japanese). *Trans. A.I.J.* **236**, 19 (1975) **237**, 77 (1975).
7. M. Epstein and and D. W. Murray, Three-dimensional large deformation analysis of thin walled beams. *Int. J. Solids. Structures* **12**, 867 (1976).
8. M. Epstein and D. W. Murray, Large deformation in-plane analysis of elastic beams. *Comput. Structures* **6**, 1 (1976).
9. M. Epstein, D. Nixon and D. W. Murray, Large displacement inelastic analysis of beam-columns. *Proc. Am. Soc. Civil. Engng* **104**(ST5), 841 (1978).
10. G. Wempner, *Mechanics of Solids*. McGraw–Hill, New York (1973).
11. M. Epstein, Thin-walled beams as directed curves. *Acta Mechanica* **33**, 229 (1979).